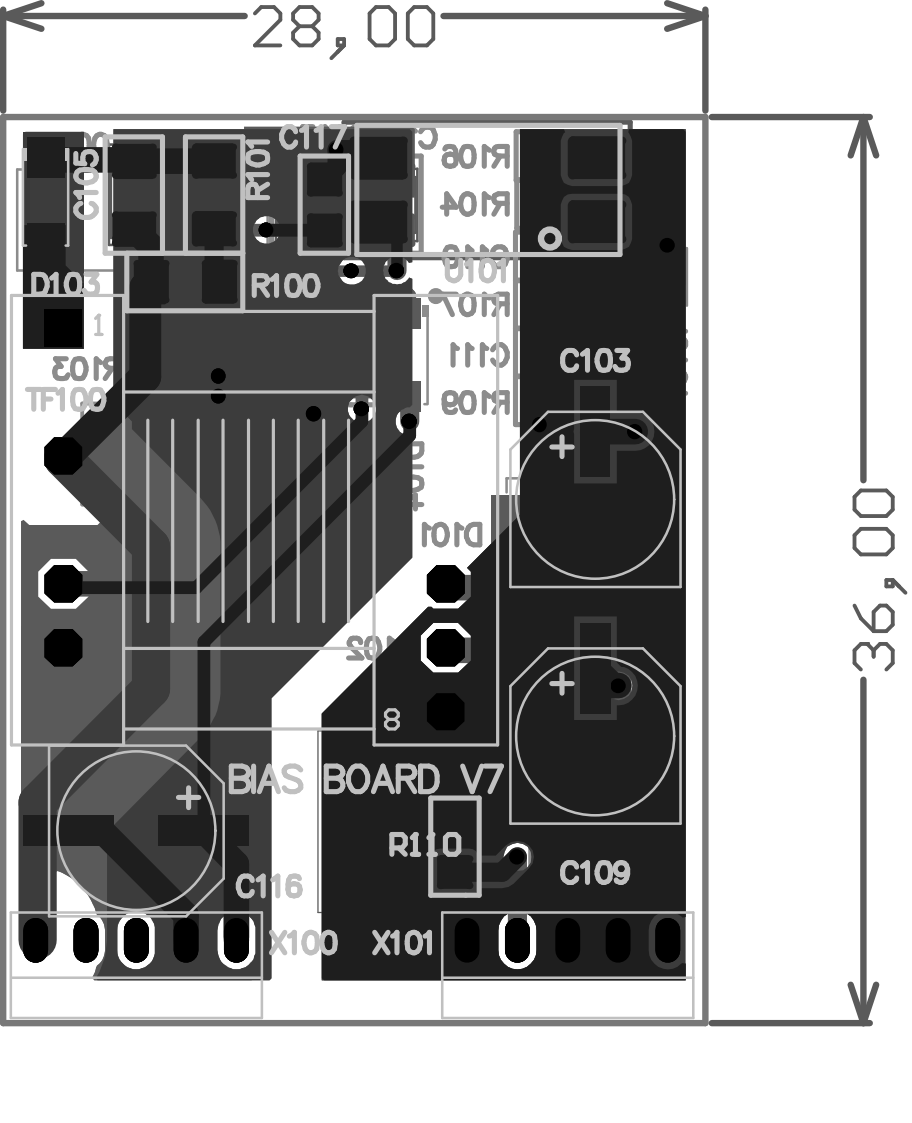
28,00
36,00
C117
C105
R101
R106
R104
R100
D103
R107
C111
C103
R103
TF100
R109
D101
D102
8
BIAS BOARD V7
R110
C109
C116
X100
X101

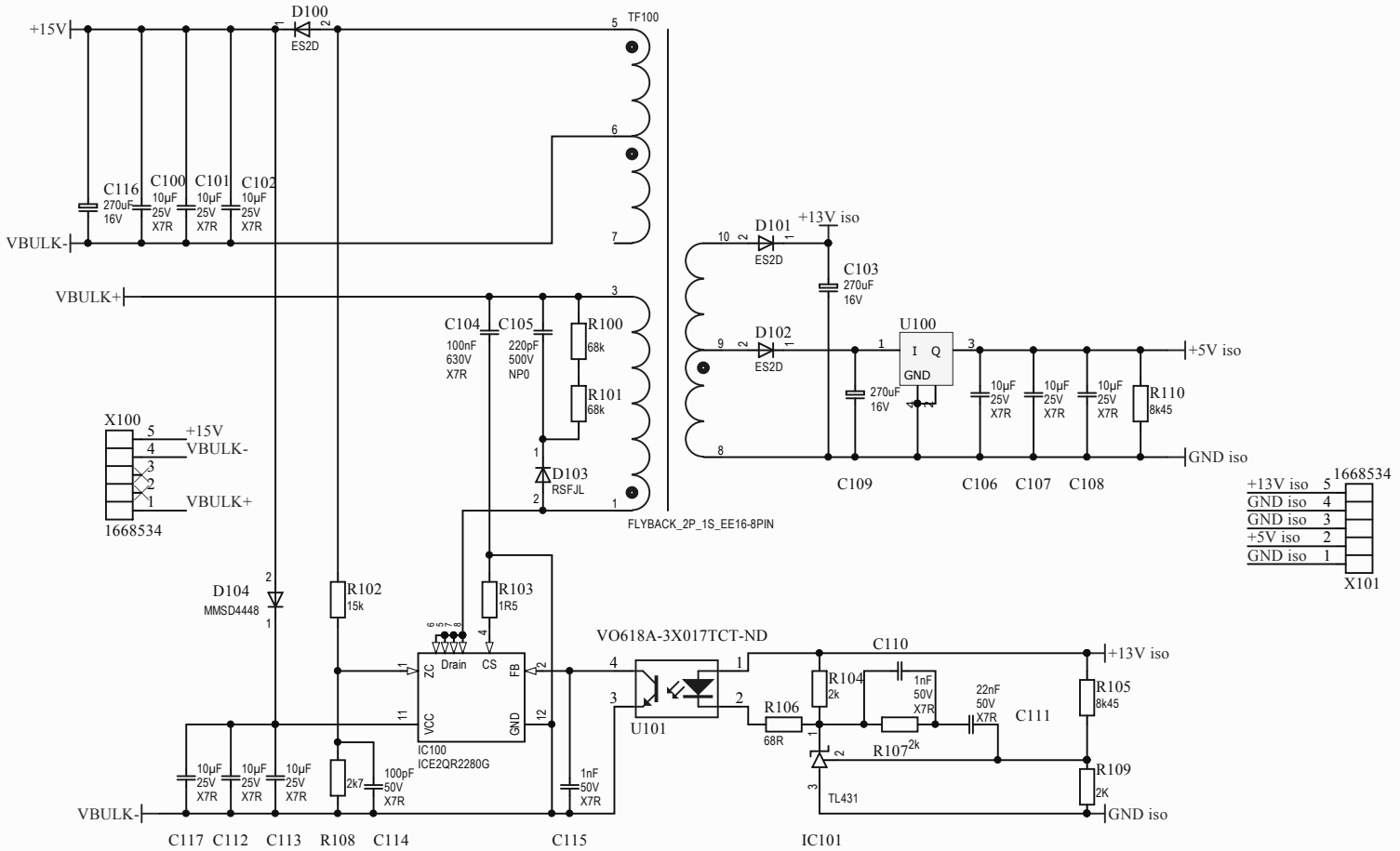

Title			*Altium Limited* *Siemensstraße 2* *9500 Villach* *Austria* *
Size: A4	Number:	Revision:	
Date: 03.03.2015	Time: 09:12:38	Sheet of	
File: C:\Altium ReUse\Bias Board V7.0\BIAS BOARD V7.0.SchDoc			